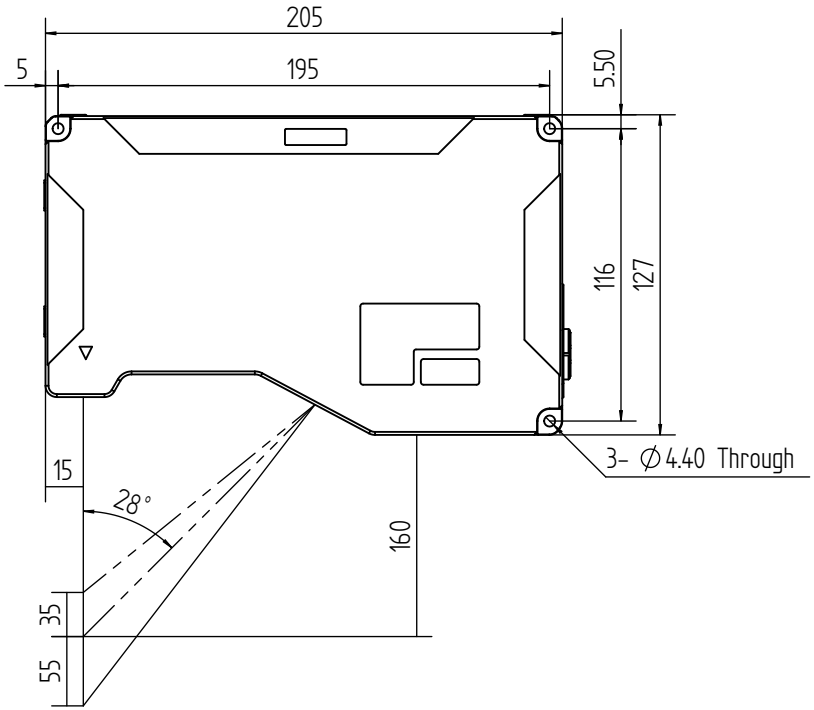

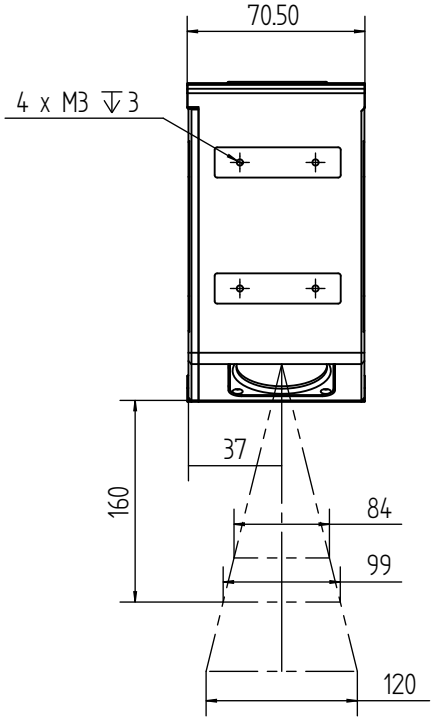

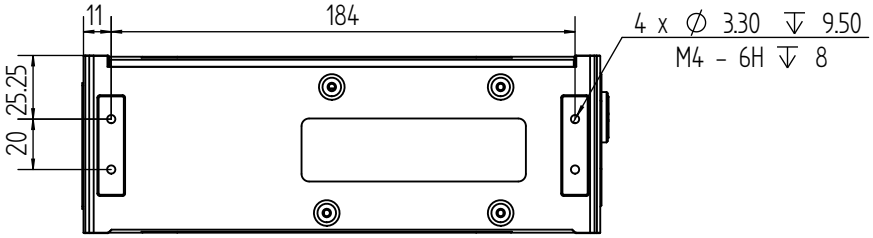

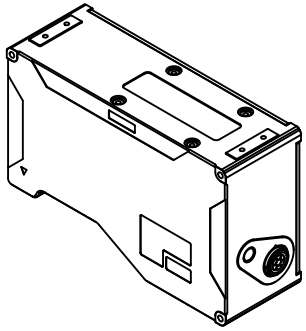

Follow the 3D drawing for those unmarked size, so do for chamfer.

Name	SR9160-01-02 Installation Diagram					Material		Part Number	SR9160	Quantity	1 pcs
Device Name	SR9160					Finishing	Black oxidation			Version	
Drawing	Huang Qingxian	Review				Approve		SSZN SHENZHEN SINCEVISION TECHNOLOGY CO., LTD			
Precision for unmarked tolerance	Size / Precision	0~80	80~200	200~500	500~1000	Angle	0.25	Projection (First-angle)		Scale	1:3
	Thick	±0.1	±0.2	±0.4	±0.8	Roughness	1.6			Date	May 24, 2022
	Medium	±0.07	±0.1	±0.3	±0.5						
	Thin	±0.05	±0.07	±0.1	±0.2						